# Spare parts list

## Hydraulic compactor

| | Valid from serial number |
|---|---|
| HC 850 | BGB920301 |

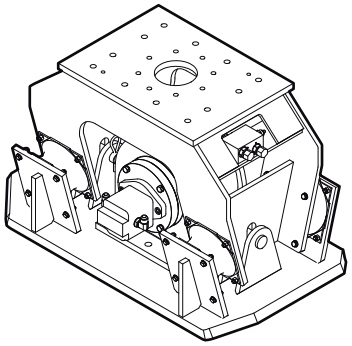

© 2013 Atlas Copco Construction Tools GmbH | No. 3390 7564 01 | 2013-11-22

# Contents

**General information** . . . . . 5

**Spare parts list** . . . . . 6
**Hydraulic compactor** . . . . . 6

**Tightening torques** . . . . . 8

**Accessories** . . . . . 9
**Hydraulic hoses** . . . . . 9
**Optional equipment** . . . . . 9

**Kits** . . . . . 10
**Label kit** . . . . . 10
**Seal kit (Hydraulic motor)** . . . . . 10
**Rubber isolator kit** . . . . . 10

**Dimensions** . . . . . 11

# General information

This spare parts list applies to the following:

| Part number | Description |
|---|---|
| 1826 1017 49 | Hydraulic compactor HC 850 |

Use only authorized parts. Any damage or malfunction caused by the use of unauthorized parts is not covered by Warranty or Product Liability.
Any unauthorized use or copying of the contents or any part thereof is prohibited. This applies in particular to trademarks, model denominations, part numbers, and drawings.

**Instructions for use**
This spare parts list contains no safety regulations and is merely intended to assist in the ordering of spare parts.
For information about operating, servicing, or repairing, the relevant Safety and operating instructions must be consulted at all costs.
Please observe the safety instructions listed in the relevant Safety and operating instructions!

**Instructions of ordering**
It is essential to indicate the serial number of the hydraulic attachment when ordering spare parts!
Determine the quantity of individual parts which are required and need to be ordered. The order must indicate the following details:

- full identification code of the hydraulic attachment
- required quantity
- part number
- description

# Spare parts list

## Hydraulic compactor

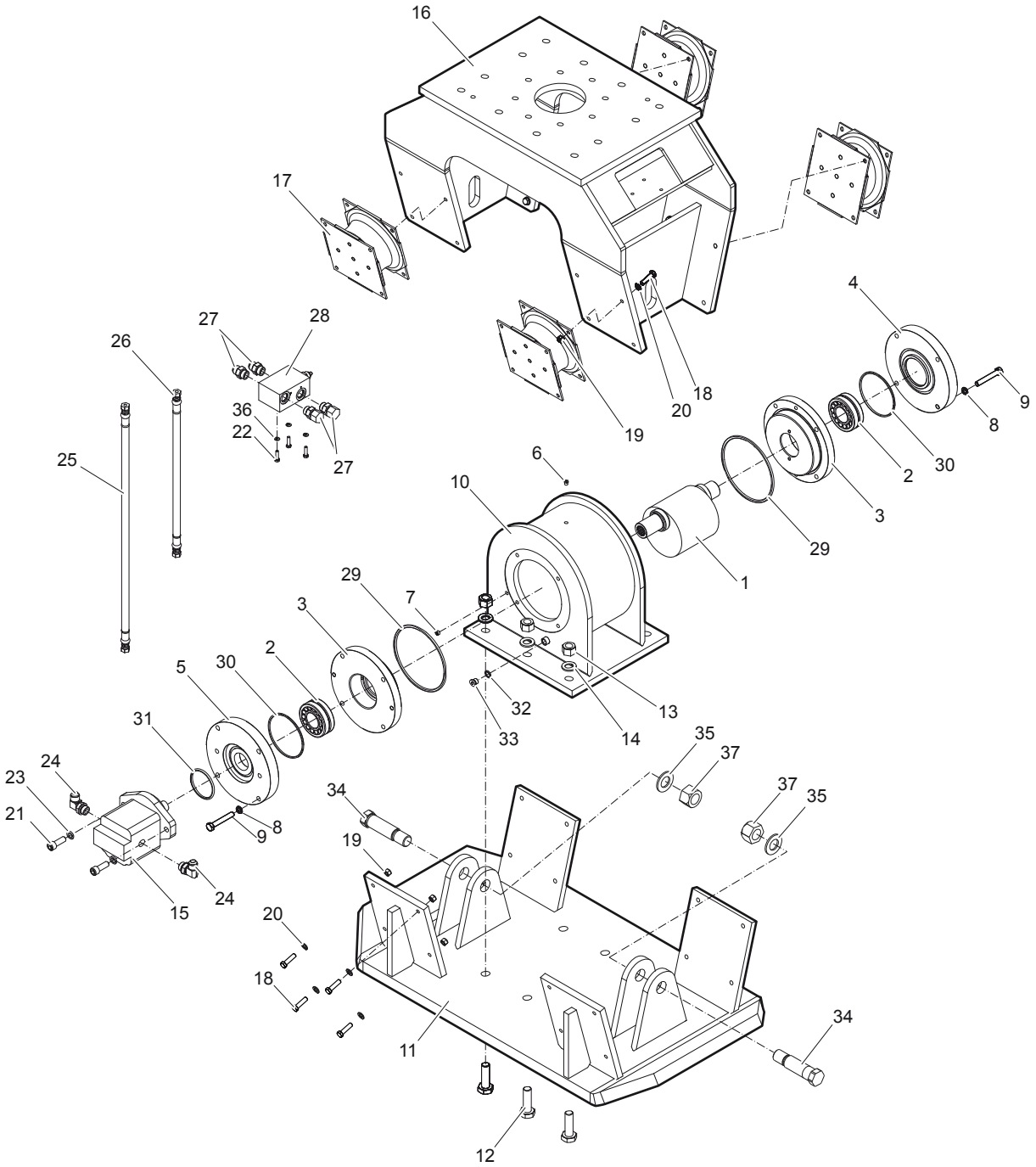



© 2013 Atlas Copco Construction Tools GmbH | No. 3390 7564 01 | 2013-11-22

| No. | Description | Remark | Quantity | Part number |
|---|---|---|---|---|
| 1 | Rotor | | 1 | 3376 6920 04 |
| 2 | Bearing | | 2 | 3376 1007 37 |
| 3 | Bearing retainer | | 2 | 3376 6980 13 |
| 4 | Bearing cover | | 1 | 3376 6980 12 |
| 5 | Bearing cover | | 1 | 3376 6980 11 |
| 6 | Air breather valve | | 1 | 3376 1007 79 |
| 7 | Threaded plug | | 1 | 3371 8131 41 |
| 8 | Washer | | 8 | 3376 1007 71 |
| 9 | Hexagon head bolt | | 8 | 3376 1007 24 |
| 10 | Rotor housing | | 1 | 3376 6981 09 |
| 11 | Tamper plate complete | with no. 12-14 | 1 | 3376 6980 35 |
| 12 | Hexagon head bolt | | 6 | 3376 1008 31 |
| 13 | Nut | | 6 | 3376 1000 66 |
| 14 | Washer | | 6 | 3376 0017 04 |
| 15 | Hydraulic motor | | 1 | 3376 1007 27 |
| 16 | Outer housing | | 1 | 3376 6981 06 |
| 17 | Rubber isolator | | 4 | 3376 1007 30 |
| 18 | Hexagon head bolt | | 32 | 3376 1005 98 |
| 19 | Nut | | 32 | 3371 8167 02 |
| 20 | Washer | | 32 | 3371 8067 05 |
| 21 | Set screw | | 2 | 3376 1001 36 |
| 22 | Hexagon head bolt | | 3 | 3376 1001 68 |
| 23 | Washer | | 2 | 3376 1000 88 |
| 24 | Elbow joint 90º | | 2 | 3376 1007 35 |
| 25 | Hydraulic hose | | 1 | 3376 1007 82 |
| 26 | Hydraulic hose | | 1 | 3376 1007 81 |
| 27 | Fitting, male thread 1-1/16 UNF 37º 3/4 JIC | | 4 | 3376 1007 31 |
| 28 | Valve block, female thread 1-1/16 UNF | | 1 | 3376 6920 07 |
| 29 | O-ring | | 2 | 3376 1007 80 |
| 30 | O-ring | | 2 | 3376 1000 74 |
| 31 | O-ring | | 1 | 3376 1000 52 |
| 32 | Seal ring | | 1 | 3377 0163 75 |
| 33 | Plug | | 1 | 3371 8037 07 |
| 34 | Axle | with no. 35 and 37 | 2 | 3376 6981 43 |
| 35 | Washer | | 2 | 0300 0129 49 |
| 36 | Washer | | 3 | 3377 0006 53 |
| 37 | Nut | | 2 | 0291 1128 32 |

# Tightening torques

| No. | Description | Tightening torque | Remark |
|---|---|---|---|
| 6 | Open-ended wrench | pretighten finger tight, then 1 - 2 turns tighten with the open-ended wrench | |
| 7 | Allen key | pretighten finger tight, then 1 - 2 turns tighten with the Allen key | |
| 9 | Open-ended wrench | 148 Nm | |
| 12 | Open-ended wrench | 798 Nm | |
| 13 | Open-ended wrench | 798 Nm | |
| 18 | Open-ended wrench | 329 Nm | |
| 19 | Open-ended wrench | 329 Nm | |
| 21 | Open-ended wrench | 230 Nm | |
| 22 | Open-ended wrench | 20 Nm | |
| 33 | Allen key | 30.5 Nm | |


© 2013 Atlas Copco Construction Tools GmbH | No. 3390 7564 01 | 2013-11-22

# Accessories

## Hydraulic hoses

| Description | Remark | Quantity | Part number |
|---|---|---|---|
| Hydraulic hose | I.D. 20 (0.79"), both ends M 36 x 2 conical seal 24º, length 2300 mm (91 in.) | 2 | 3360 3322 94 |
| Hydraulic hose | I.D. 20 (0.79"), both ends M 36 x 2 conical seal 24º, length 2800 mm (110 in.) | 2 | 3363 0859 47 |

**Note**

You need a special fitting set when using these hose connections. The fitting set must be ordered separately.

Accessories to the hydraulic hoses

| Description | Remark | Quantity | Part number |
|---|---|---|---|
| Fitting set | | 1 | 3363 0982 87 |

**Note**

Remove the genuine fittings carrier side from the valve block before mounting the fitting set.

## Optional equipment

| Description | Remark | Quantity | Part number |
|---|---|---|---|
| Cobra & Compactor Impact-Oil | 1 x 1 l (0.22 gal) (0.26 US gal) | 1 | 9234 0012 03 |
| Cobra & Compactor Impact-Oil | 20 x 1 l (0.22 gal) (0.26 US gal) | 1 | 9234 0014 05 |
| Adapter plate matching the carrier | Consult the Atlas Copco Customer Center/Dealer in your area. | 1 | - |
| Base plate with threaded inserts | | 1 | 3363 0997 97 |
| Bolt kit | | 1 | 3363 0945 37 |
| Base plate with through borings | | 1 | 3363 1006 95 |
| Bolt kit | | 1 | 3363 0945 74 |
| Allen key | 19 mm for bolt kit | 1 | 3360 2092 53 |
| Backfill blade kit | | 1 | 3376 6981 08 |
| **Rotation device** | | 1 | 1826 1016 44 |
| Allen screw | | 8 | - |
| Pair of locking rings | | 16 | - |
| Rotor | | 1 | - |
| Hexagonal nut | | 8 | - |
| **Connection kit for rotation device** | | 1 | 3376 6980 37 |
| Hydraulic hose | | 2 | - |
| Fitting | | 2 | - |
| Fitting | | 2 | - |
| Fitting | | 2 | - |
| Fitting | | 2 | - |

# Kits

## Label kit

| No. | Description | Remark | Quantity | Part number |
|---|---|---|---|---|
| | **Label kit** | | 1 | 3376 6980 31 |

## Seal kit (Hydraulic motor)

| No. | Description | Remark | Quantity | Part number |
|---|---|---|---|---|
| | **Seal kit (Hydraulic motor)** | | 1 | 3376 6920 36 |

## Rubber isolator kit

| No. | Description | Remark | Quantity | Part number |
|---|---|---|---|---|
| | **Rubber isolator kit** | | 1 | 3376 6920 32 |
| 17 | Rubber isolator | | 4 | 3376 1007 30 |
| 18 | Hexagon head bolt | | 32 | 3376 1001 70 |
| 19 | Nut | | 32 | 3371 8167 02 |
| 20 | Washer | | 32 | 3371 8167 05 |


© 2013 Atlas Copco Construction Tools GmbH | No. 3390 7564 01 | 2013-11-22

# Dimensions

mm (inch)

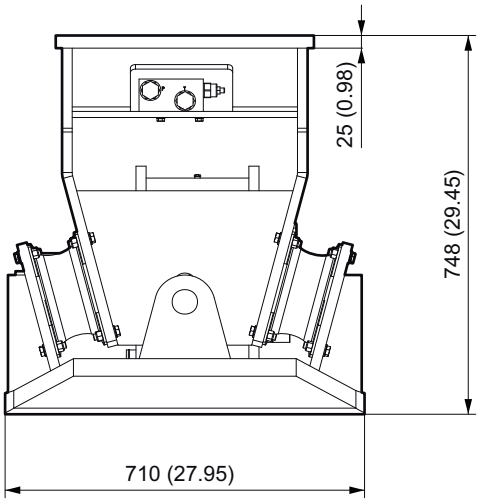


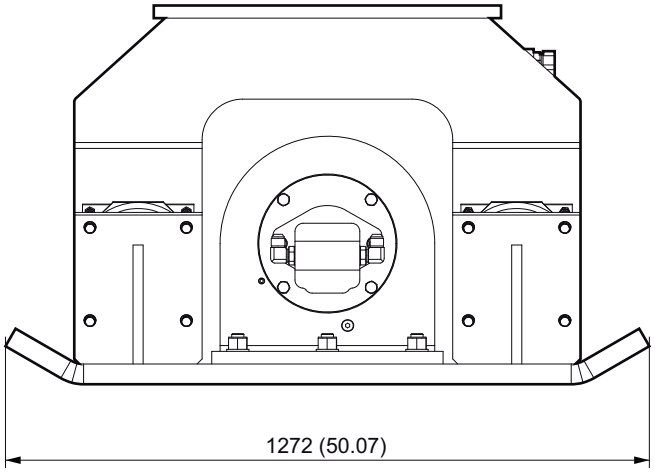


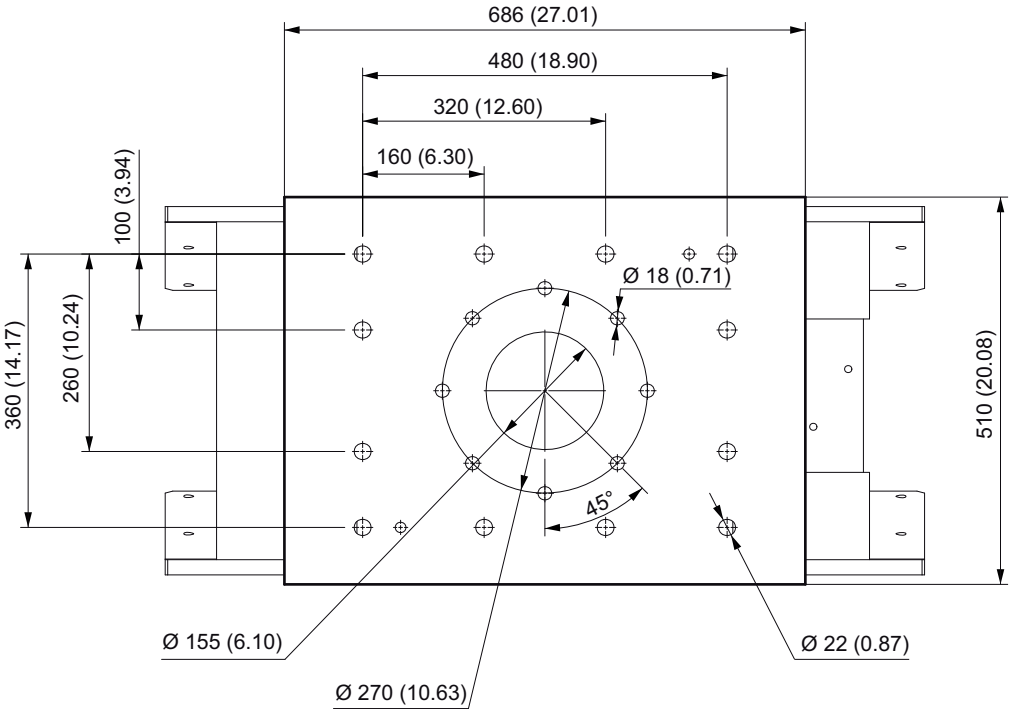

Any unauthorized use or copying of the contents or any part thereof is prohibited. This applies in particular to trademarks, model denominations, part numbers, and drawings.

© 2013 Atlas Copco Construction Tools GmbH | No. 3390 7564 01 | 2013-11-22

Atlas Copco

www.atlascopco.com