Spare parts list

Hydraulic compactor

	Valid from serial number
HC 350	BGF043164

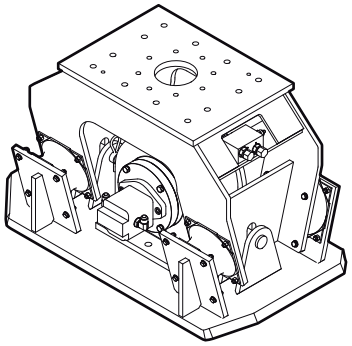

© 2014 Atlas Copco Construction Tools GmbH | No. 3390 7562 01 | 2014-02-13

Contents

General information 5

Spare parts list 6
Hydraulic compactor 6

Tightening torques 8

Accessories 9
Hydraulic hoses 9
Optional equipment 9

Kits 10
Label kit 10
Seal kit (Hydraulic motor) 10
Rubber isolator kit 10

Dimensions 11

General information

This spare parts list applies to the following:

Part number	Description
1826 1017 47	Hydraulic compactor HC 350

Use only authorized parts. Any damage or malfunction caused by the use of unauthorized parts is not covered by Warranty or Product Liability.
Any unauthorized use or copying of the contents or any part thereof is prohibited. This applies in particular to trademarks, model denominations, part numbers, and drawings.

Instructions for use
This spare parts list contains no safety regulations and is merely intended to assist in the ordering of spare parts.
For information about operating, servicing, or repairing, the relevant Safety and operating instructions must be consulted at all costs.
Please observe the safety instructions listed in the relevant Safety and operating instructions!

Instructions of ordering
It is essential to indicate the serial number of the hydraulic attachment when ordering spare parts!
Determine the quantity of individual parts which are required and need to be ordered. The order must indicate the following details:

- full identification code of the hydraulic attachment
- required quantity
- part number
- description

Spare parts list

Hydraulic compactor

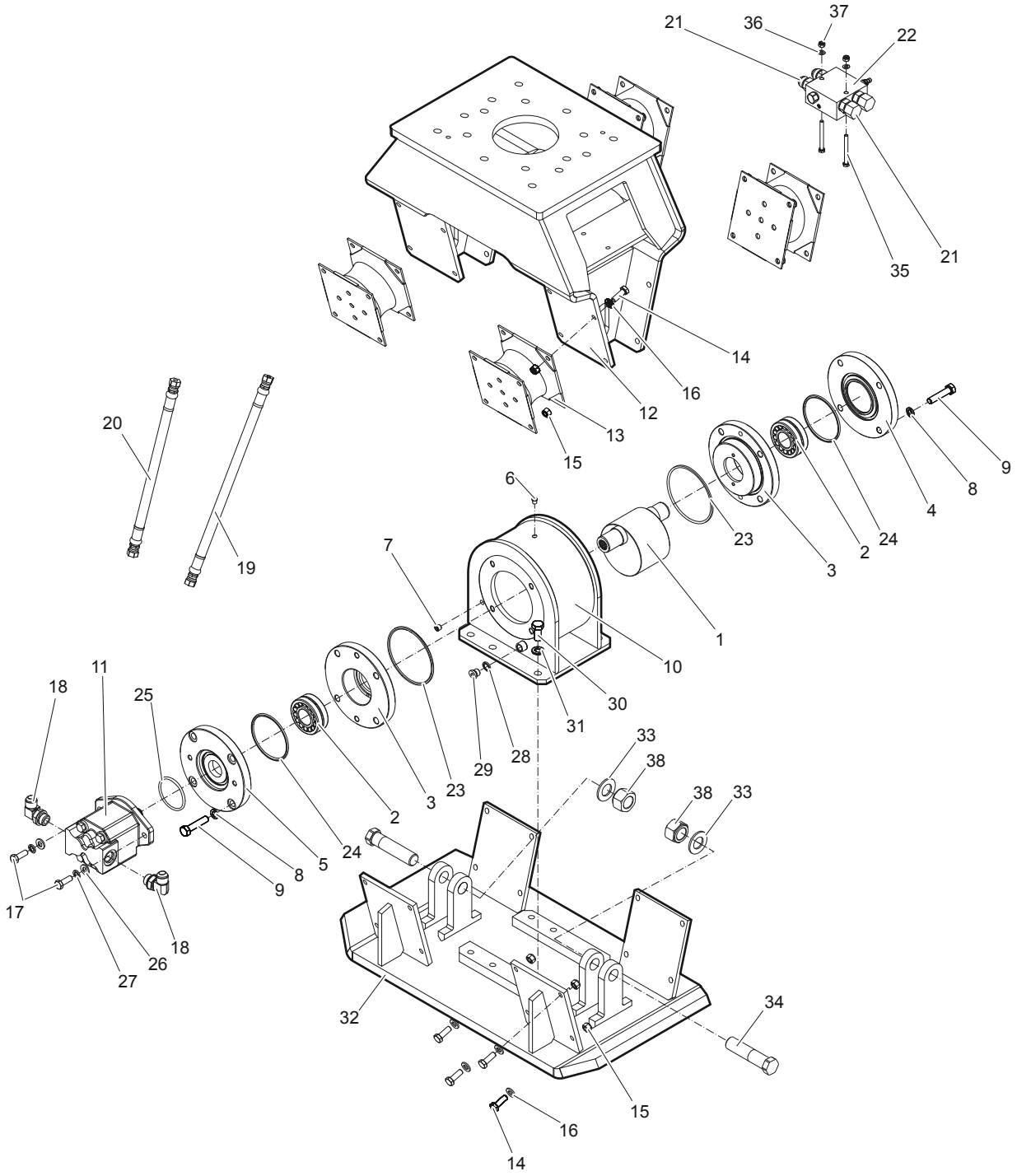

© 2014 Atlas Copco Construction Tools GmbH | No. 3390 7562 01 | 2014-02-13

No.	Description	Remark	Quantity	Part number
1	Rotor		1	3376 6900 04
2	Bearing		2	3376 1007 56
3	Bearing retainer		2	3376 6960 12
4	Bearing cover		1	3376 6960 13
5	Bearing cover		1	3376 6960 11
6	Air breather valve		1	3376 1007 79
7	Threaded plug		1	3371 8131 41
8	Washer		8	3376 1007 71
9	Hexagon head bolt		8	3376 1007 57
10	Rotor housing		1	3376 6961 09
11	Hydraulic motor		1	3376 1007 52
12	Outer housing		1	3376 6961 06
13	Rubber isolator		4	3376 1007 55
14	Hexagon head bolt		32	3371 8167 00
15	Nut		32	3371 8167 02
16	Washer		32	3371 8067 05
17	Hexagon head bolt		2	3371 8167 00
18	Elbow joint 90º		2	3376 1007 35
19	Hydraulic hose		1	3376 1014 86
20	Hydraulic hose		1	3376 1015 19
21	Fitting, ¾ UNF x 1-1/16 UNF 37º JIC ¾ male		4	3376 1007 54
22	Valve block, ¾ UNF ports female		1	3376 6900 07
23	O-ring		2	3376 1000 74
24	O-ring		2	3376 1000 60
25	O-ring		1	3371 8067 10
26	Washer		2	3371 8067 05
27	Spring lock washer		2	3376 1006 24
28	Seal ring		1	3377 0163 75
29	Plug		1	3371 8037 07
30	Hexagon head bolt		6	3378 3025 01
31	Washer		6	3376 1001 43
32	Tamper plate		1	3376 6961 03
33	Washer		2	3376 1100 03
34	Axle	with part no. 33 and 38	2	3376 6961 43
35	Hexagon head bolt		2	3376 1005 68
36	Washer		2	3377 0004 69
37	Nut		2	3377 1110 08
38	Nut		2	3376 1001 46

Tightening torques

No.	Description	Tightening torque	Remark
6	Open-ended wrench	pretighten finger tight, then 1 - 2 turns tighten with the open-ended wrench	
7	Allen key	pretighten finger tight, then 1 - 2 turns tighten with the Allen key	
9	Open-ended wrench	148 Nm	
14	Open-ended wrench	93 Nm	
15	Open-ended wrench	93 Nm	
17	Open-ended wrench	93 Nm	
29	Allen key	30.5 Nm	
30	Open-ended wrench	230 Nm	
35	Open-ended wrench	20 Nm	

© 2014 Atlas Copco Construction Tools GmbH | No. 3390 7562 01 | 2014-02-13

Accessories

Hydraulic hoses

Description	Remark	Quantity	Part number
Hydraulic hose	I.D. 12 (0.47"), both ends M 22 x 1.5 conical seal 24º, length 1750 mm (69 in.)	2	3361 3535 51
Hydraulic hose	I.D. 12 (0.47"), both ends M 22 x 1.5 conical seal 24º, length 2100 mm (83 in.)	2	3363 0859 46

Note

You need a special fitting set when using these hose connections. The fitting set must be ordered separately.

Accessories to the hydraulic hoses

Description	Remark	Quantity	Part number
Fitting set		1	3363 0982 86

Note

Remove the genuine fittings carrier side from the valve block before mounting the fitting set.

Optional equipment

Description	Remark	Quantity	Part number
Cobra & Compactor Impact-Oil	1 x 1 l (0.22 gal) (0.26 US gal)	1	9234 0012 03
Cobra & Compactor Impact-Oil	20 x 1 l (0.22 gal) (0.26 US gal)	1	9234 0014 05
Adapter plate matching the carrier	Consult the Atlas Copco Customer Center/Dealer in your area.	1	-
Base plate with through borings		1	3315 2951 00
Bolt kit		1	3315 2964 90
Open end spanner	24/27 mm for bolt kit	1	3360 4306 55
Backfill blade kit		1	3376 6961 08
Rotation device		1	1826 1016 44
Allen screw		8	-
Pair of locking rings		16	-
Rotor		1	-
Hexagonal nut		8	-
Connection kit for rotation device		1	3376 6960 37
Hydraulic hose		2	-
Fitting		6	-
Fitting		4	-
Fitting		2	-

Kits

Label kit

No.	Description	Remark	Quantity	Part number
	Label kit		1	3376 6960 31

Seal kit (Hydraulic motor)

No.	Description	Remark	Quantity	Part number
	Seal kit (Hydraulic motor)		1	3376 6900 36

Rubber isolator kit

No.	Description	Remark	Quantity	Part number
	Rubber isolator kit		1	3376 6900 32
13	Rubber isolator		4	3376 1007 55
14	Hexagon head bolt		32	3371 8167 00
15	Nut		32	3371 8167 02
16	Washer		32	3371 8167 05

© 2014 Atlas Copco Construction Tools GmbH | No. 3390 7562 01 | 2014-02-13

Dimensions

mm (inch)

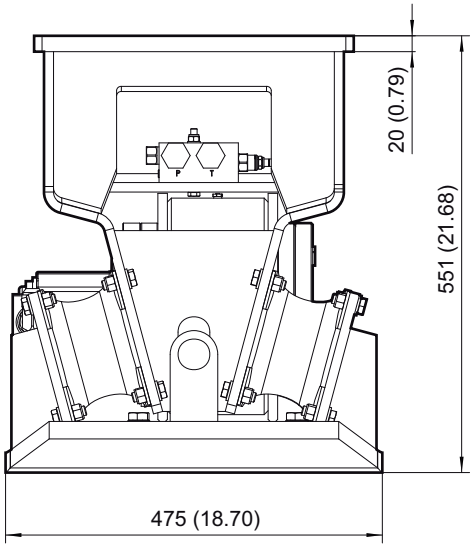

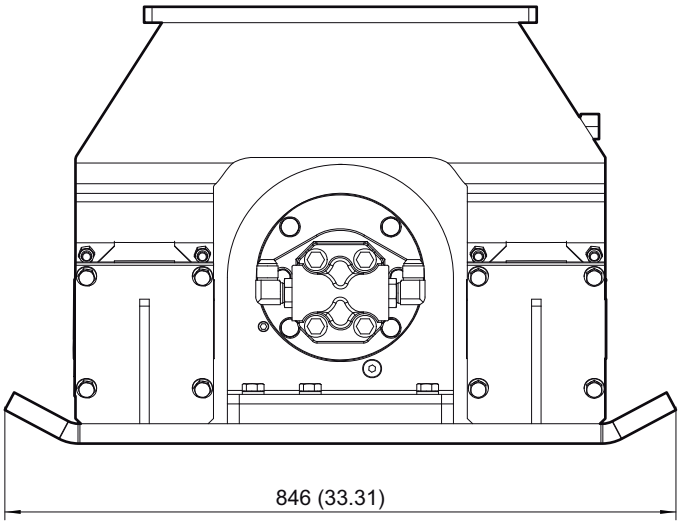

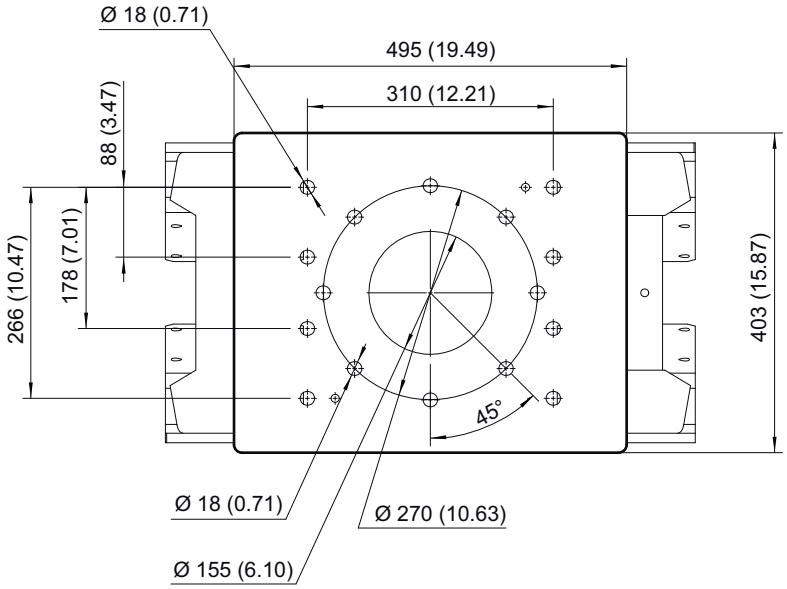

Any unauthorized use or copying of the contents or any part thereof is prohibited. This applies in particular to trademarks, model denominations, part numbers, and drawings.

© 2014 Atlas Copco Construction Tools GmbH | No. 3390 7562 01 | 2014-02-13

Atlas Copco

www.atlascopco.com