SBU

340

Spare parts list

Hydraulic breakers

	Valid from serial number
SBU 340	BES1623

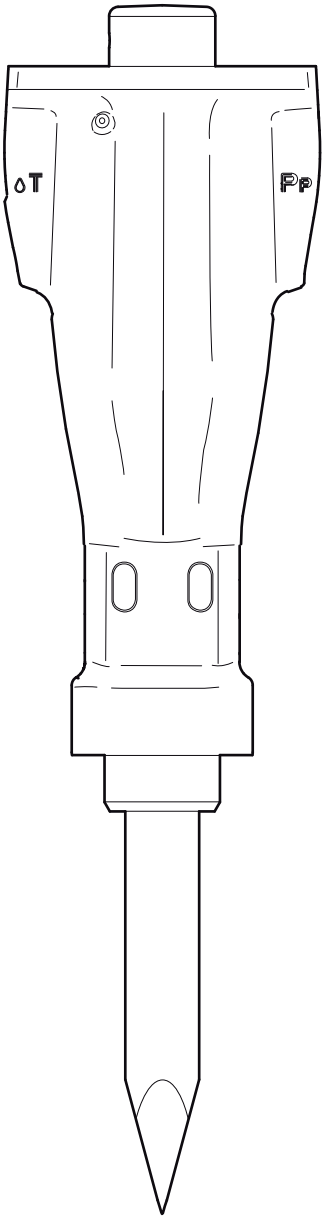

© 2012 Atlas Copco Construction Tools AB | No. 9800 0909 01d | 2012-12-05

Contents

General information 5

Spare parts list 6
Optional parts 10
Bushing oversize, complete 10
Restrictor, complete 12

Tightening torque 14

Working tools 15

Accessories 17
Optional equipment 17
Hydraulic hoses 17

Kits 18
Label kit 18
Seal kit 19
Lower hammer part kit 20
Accumulator repair kit 21

Dimensions 22

General information

This spare parts list applies to the following:

Part number	Description
8460 0300 65	Hydraulic breaker SBU 340

Use only authorized parts. Any damage or malfunction caused by the use of unauthorized parts is not covered by Warranty or Product Liability.
Any unauthorized use or copying of the contents or any part thereof is prohibited. This applies in particular to trademarks, model denominations, part numbers, and drawings.

Instructions for use
This spare parts list contains no safety regulations and is merely intended to assist in the ordering of spare parts.
For information about operating, servicing, or repairing, the relevant Safety and operating instructions must be consulted at all costs.
Please observe the safety instructions listed in the relevant Safety and operating instructions!

Spare parts list

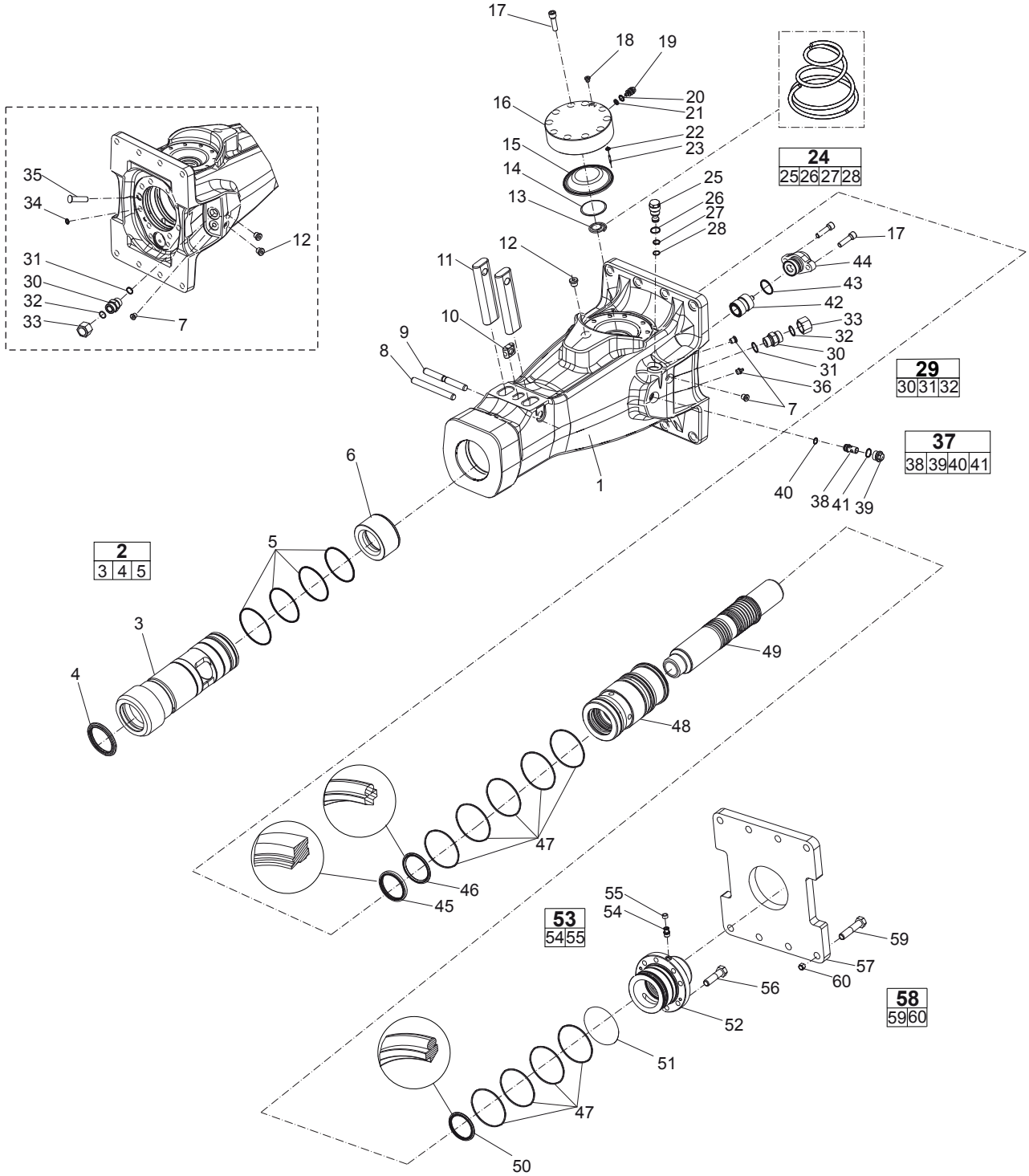

© 2012 Atlas Copco Construction Tools AB | No. 9800 0909 01d | 2012-12-05

No.	Description	Remark	Quantity	Part number
1	Breaker body		1	-
2(3-5)	**Bushing standard, complete**	For more bushings, see section "Bushing oversize, complete".	1	3315 3019 80
3	Bushing	Ø110 mm Ø4.33 in.	1	-
4	Scraper ring		1	3315 3250 00
5	O-ring	99.5 x 3 mm 3.9 x 0.12 in. (70 shore)	4	0663 2106 17
6	Stop ring		1	3315 3014 00
7	Plug	VSTI R ¼ - ED	3	0686 6442 07
8	Spring pin, option		1	0108 1691 28
9	Lock pin		1	3315 2031 00
10	Lock buffer		1	3315 1419 00
11	Tool retainer		2	3315 2030 00
12	Hexagon socket plug	VSTI R⅜ - ED	3	0686 3718 01
13	Coil spring		1	3315 3035 00
14	Diaphragm support		1	3315 4007 00
15	Diaphragm		1	3315 2350 00
16	Accumulator house		1	3315 3554 00
17	Hexagon socket screw	Screw with extra high fatigue strength.	12	0211 1965 34
18	Plug	VSTI R⅛ - ED	1	0686 3718 05
19	Charge valve		1	3315 3660 00
20	O-ring	13.3 x 2.4 mm 0.5 x 0.09 in. (70 shore)	1	0663 2120 00
21	Seal ring	8 x 14 x 2.4 mm 0.31 x 0.55 x 0.09 in. (90 shore)	1	3115 3290 02
22	O-ring	7.3 x 2.4 mm 0.29 x 0.09 in. (90 shore)	1	0663 2114 00
23	Parallel pin	D4 x 25 mm	1	0101 4140 00
24(25-28)	**Pressure relief valve, complete**		1	3315 3658 00
25	Pressure relief valve		1	-
26	O-ring	20.35 x 1.78 mm 0.80 x 0.07 in. (90 shore)	1	9125 6211 00
27	O-ring	14 x 1.78 mm 0.55 x 0.07 in. (90 shore)	1	0663 2104 21
28	Support ring		1	0661 2004 01
29(30-32)	**Nipple, complete**	There are two "Nipple, complete" on the machine.	1	0570 7000 04
30	Nipple	1³⁄₁₆ - 12UN G¾A	1	-
31	Seal ring		1	0664 0000 04
32	O-ring		1	0663 2102 17
33	Cap		2	0570 7000 10
34	Seal		1	0665 0900 14
35	Plug		1	3315 3367 00
36	Grease nipple		1	0544 2153 00
37(38-41)	**Restrictor standard, complete**	For more restrictors, see section "Restrictor, complete".	1	3315 3694 64
38	Restictor, standard	Ø6.4 mm Ø0.25 in.	1	-
39	Restrictor plug		1	-
40	O-ring	14 x 1.78 mm 0.55 x 0.07 in. (90 shore)	1	0663 2104 21
41	O-ring	20.35 x 1.78 mm 0.80 x 0.07 in. (90 shore)	1	9125 6211 00
42	Control valve		1	3315 3624 00
43	O-ring	45 x 53 x 3 mm 1.77 x 2.09 x 0.12 in. (90 shore)	1	0663 9900 33

No.	Description	Remark	Quantity	Part number
44	Valve cover		1	3315 3629 00
45	Wiper		1	0665 9099 57
46	Piston rod seal		1	0665 0701 37
47	Seal ring		9	0663 9900 31
48	Liner		1	3315 3552 00
49	Piston		1	3315 3547 00
50	Piston rod seal		1	0665 0701 46
51	O-ring	133.07 x 1.78 mm 5.24 x 0.07 in. NBR (70 shore)	1	0663 2106 69
52	Back head		1	3315 3553 00
53(54-55)	**Check valve, complete**		1	3315 2448 81
54	Check valve		1	-
55	Valve rubber		1	3315 2808 00
56	Hexagon head screw	M16 x 60 mm 8.8	8	0147 1481 03
57	Base plate		1	3315 3566 00
58(59-60)	**Set of eight screws, complete**		1	3315 3653 60
59	Screw	M16 x 90 mm 8.8	8	-
60	Nut	M16	8	-

© 2012 Atlas Copco Construction Tools AB | No. 9800 0909 01d | 2012-12-05

Optional parts

Bushing oversize, complete

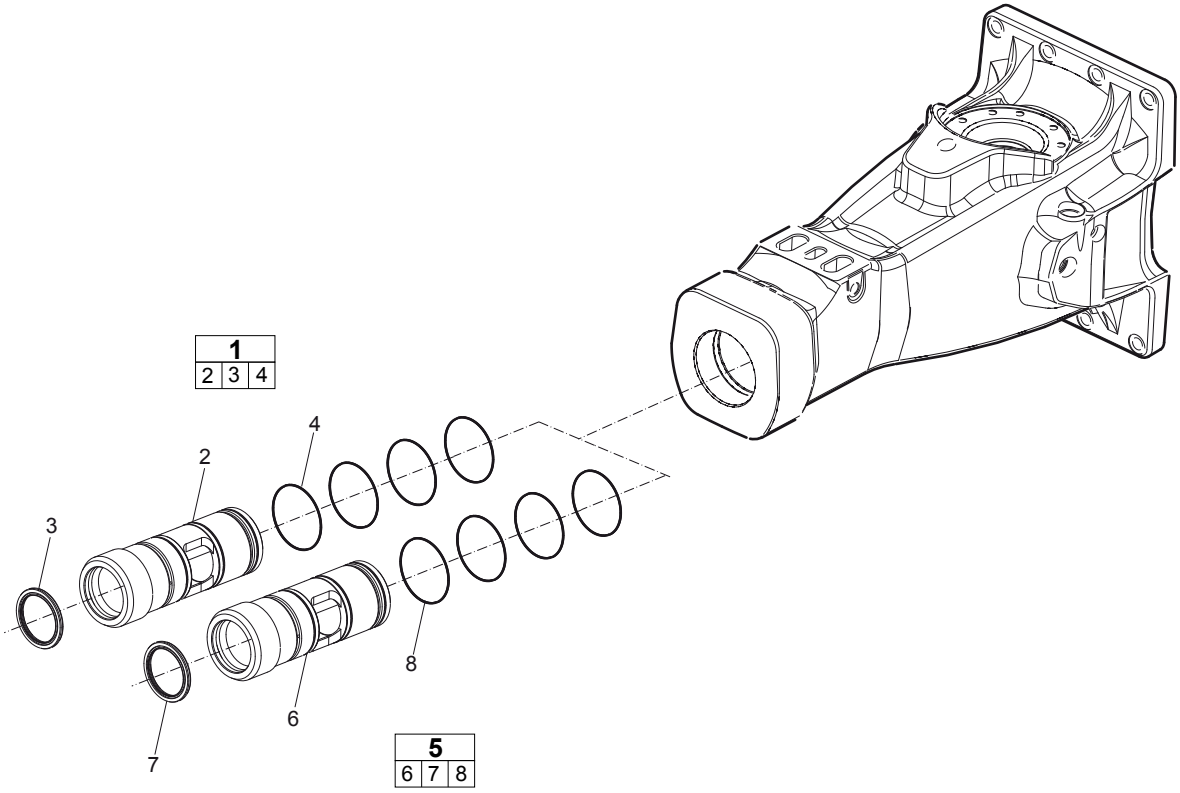

© 2012 Atlas Copco Construction Tools AB | No. 9800 0909 01d | 2012-12-05

No.	Description	Remark	Quantity	Part number
1(2-4)	**Bushing oversize, complete**		1	3315 3019 60
2	Bushing	Ø111.5 mm Ø4.39 in.	1	-
3	Scraper ring		1	3315 3250 00
4	O-ring	99.5 x 3 mm 3.92 x 0.12 in. (70 shore)	4	0663 2106 17
5(6-8)	**Bushing oversize, complete**		1	3315 3019 63
6	Bushing	Ø113 mm Ø4.45 in.	1	-
7	Scraper ring		1	3315 3250 00
8	O-ring	99.5 x 3 mm 3.92 x 0.12 in. (70 shore)	4	0663 2106 17

Restrictor, complete

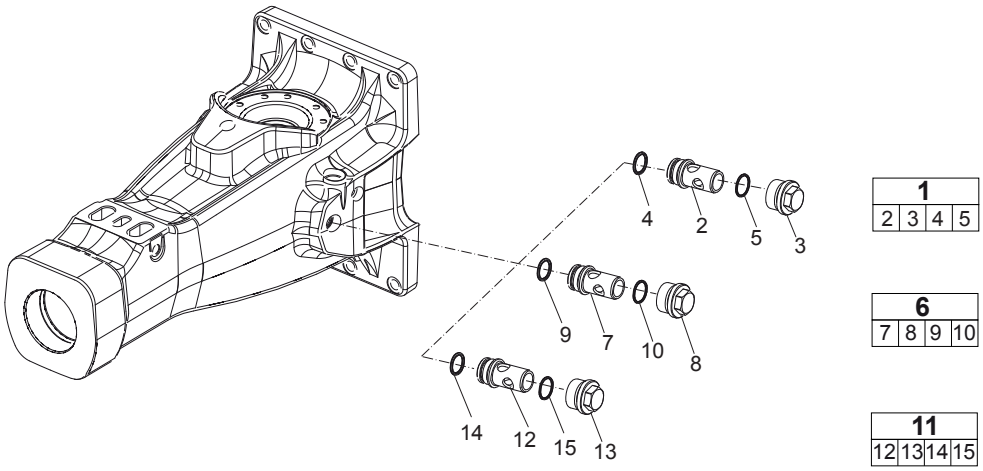

© 2012 Atlas Copco Construction Tools AB | No. 9800 0909 01d | 2012-12-05

No.	Description	Remark	Quantity	Part number
1(2-5)	**Restrictor, complete**		1	3315 3694 54
2	Restrictor	Ø5.4 mm Ø0.21 in.	1	-
3	Plug		1	-
4	O-ring	14 x 1.78 mm 0.55 x 0.07 in. (90 shore)	1	0663 2104 21
5	O-ring	20.35 x 1.78 mm 0.80 x 0.07 in. (90 shore)	1	9125 6211 00
6(7-10)	**Restrictor, complete**		1	3315 3694 60
7	Restrictor	Ø6.0 mm Ø0.24 in.	1	-
8	Plug		1	-
9	O-ring	14 x 1.78 mm 0.55 x 0.07 in. (90 shore)	1	0663 2104 21
10	O-ring	20.35 x 1.78 mm 0.80 x 0.07 in. (90 shore)	1	9125 6211 00
11(12-15)	**Restrictor, complete**		1	3315 3694 77
12	Restrictor	Ø7.7 mm Ø0.30 in.	1	-
13	Plug		1	-
14	O-ring	14 x 1.78 mm 0.55 x 0.07 in. (90 shore)	1	0663 2104 21
15	O-ring	20.35 x 1.78 mm 0.80 x 0.07 in. (90 shore)	1	9125 6211 00

Tightening torque

No.	Description	Tightening torque	Remark
7	Plug	30 Nm	LOCTITE® 243™
12	Hexagon socket plug	80 Nm	LOCTITE® 243™
17	Hexagon socket screw	120 Nm	Molykote®
18	Plug	20 Nm	
19	Charge valve	20 Nm	
25	Pressure relief valve	80 Nm	
30	Nipple	210 Nm	
36	Grease nipple	30 Nm	
39	Restrictor plug	80 Nm	
54	Check valve	30 Nm	LOCTITE® 243™
56	Hexagon head screw	180 Nm	Molykote®
60	Nut	200 Nm	Molykote®

Loctite is a registered trademark of Henkel Corporation. 243 is a trademark of Henkel Corporation.
Molykote is a registered trademark of Dow Corning Corporation.

© 2012 Atlas Copco Construction Tools AB | No. 9800 0909 01d | 2012-12-05

Working tools

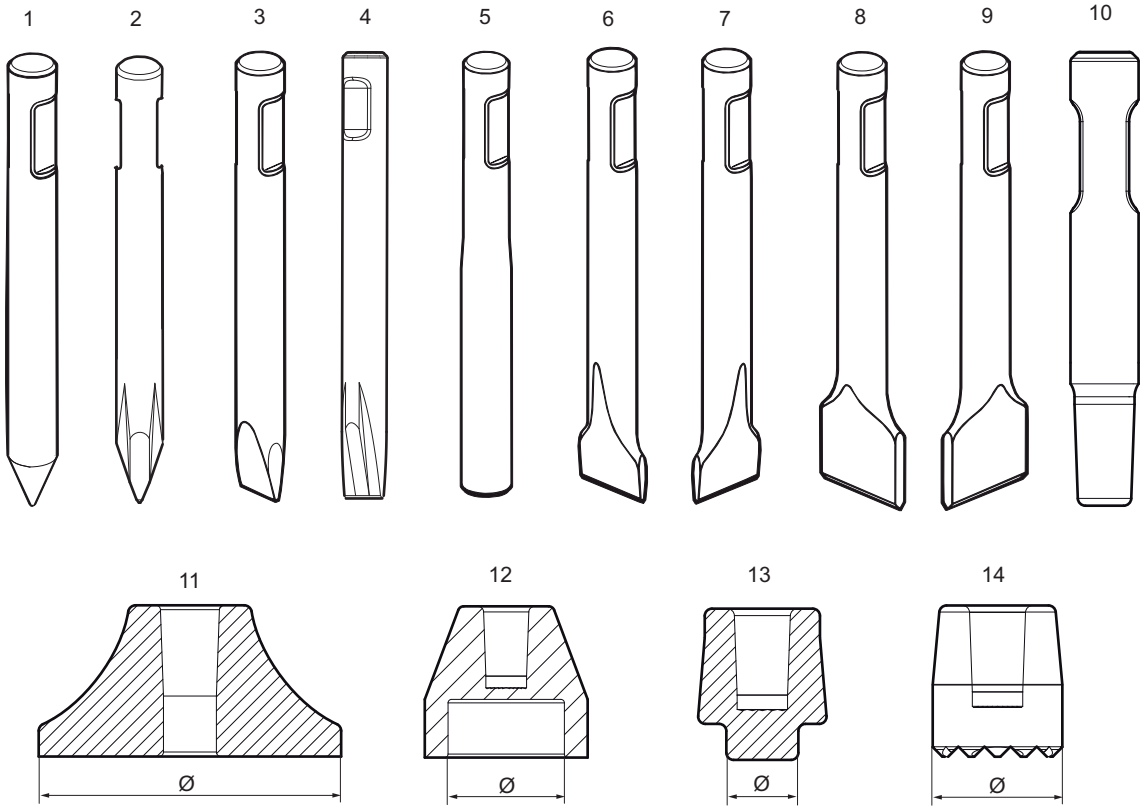

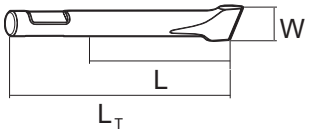

Metric

No.	Description	W (mm)	L (mm)	L_T (mm)	Wt (kg)	Part number
1	Moil point	- -	420 620	800 1000	28 35	3083 3191 00 3083 3191 01
2	Moil point (X-Profile)	-	420	800	26	3363 0982 54
3	Chisel (cross)	80 80	420 620	800 1000	28 36	3083 3192 00 3083 3192 01
4	Chisel (X-profile)	80	420	800	27	3363 0982 55
5	Blunt tool	-	420	800	30	3083 3195 00
6	Wide chisel (parallel)	160	390	770	26	3083 3194 00
7	Wide chisel (cross)	160	390	770	26	3083 3193 00
8	Asphalt cutter (cross)	180	420	800	27	3083 3409 44
9	Asphalt cutter (parallel)	180	420	800	27	3083 3409 45
10	Shaft	-	-	600	15	3315 3703 00
11	Tamping pad (square)	Ø300	-	-	33	3315 3709 00
12	Post driver pad (round)	Ø150	-	-	21	3315 3717 00
13	Pile driver pad (round)	Ø100	-	-	9	3315 3723 00
14	Bushing pad (round)	Ø130	-	-	9.8	3315 3730 00

Imperial

No.	Description	W (in.)	L (in.)	L_T (in.)	Wt (lb)	Part number
1	Moil point	- -	16.54 24.41	31.50 39.37	61.7 77.2	3083 3191 00 3083 3191 01
2	Moil point (X-Profile)	-	16.54	31.50	57.3	3363 0982 54
3	Chisel (cross)	3.15 3.15	16.54 24.41	31.50 39.37	61.7 79.4	3083 3192 00 3083 3192 01
4	Chisel (X-profile)	3.15	16.54	31.50	59.5	3363 0982 55
5	Blunt tool	-	16.54	31.50	66.1	3083 3195 00
6	Wide chisel (parallel)	6.30	15.35	30.31	57.3	3083 3194 00
7	Wide chisel (cross)	6.30	15.35	30.31	57.3	3083 3193 00
8	Asphalt cutter (cross)	7.09	16.54	31.50	59.5	3083 3409 44
9	Asphalt cutter (parallel)	7.09	16.54	31.50	59.5	3083 3409 45
10	Shaft	-	-	23.62	33.1	3315 3703 00
11	Tamping pad (square)	Ø11.81	-	-	72.8	3315 3709 00
12	Post driver pad (round)	Ø5.90	-	-	46.3	3315 3717 00
13	Pile driver pad (round)	Ø3.94	-	-	19.8	3315 3723 00
14	Bushing pad (round)	Ø5.12	-	-	21.6	3315 3730 00

© 2012 Atlas Copco Construction Tools AB | No. 9800 0909 01d | 2012-12-05

Accessories

Optional equipment

Description	Remark	Quantity	Part number
Grease gun	For manual greasing with cartridge, 400 g (0.88 lb)	1	0909 1071 00
Chisel paste cartridge	400 g x 12 0.88 lb x 12	1	3363 0949 13
ContiLube™ II micro		1	3315 3831 90
Welding kit, universal	For ContiLube™ II micro	1	3315 3867 80
Hose kit, universal	For ContiLube™ II micro	1	3315 3862 80
Chisel paste cartridge	150 g x 12 0.33 lb x 12	1	3363 1064 47
Filling device	For the 150 g (0.33 lb) Chisel paste cartridges, to use in combination with Chisel paste container 15 kg (33 lb)	1	3363 0946 69
Filling adapter	For the 150 g (0.33 lb) Chisel paste cartridges, suitable with the filling device for 15 kg (33 lb) and 45 kg (99 lb)	1	3315 3839 80
Filling device	For the 150 g (0.33 lb) Chisel paste cartridges, to use in combination with Chisel paste container 45 kg (99 lb)	1	3363 0664 11
Chisel paste container	15 kg 33 lb	1	3362 2639 00
Chisel paste container	45 kg 99 lb	1	3362 2632 75
Filling device for accumulator		1	3360 9204 15
Nipple, for charging the accumulator		1	3363 0944 59
Filling hose, for charging the accumulator		1	3361 3298 03
Bushing wear controller		1	3315 3531 00

Hydraulic hoses

Description	Remark	Quantity	Part number
Hose	I.D. 16 (0.63 in.), both ends M26 x 1.5 mm conical seal 24°, length 1.5 m (59 in.)	2	3360 9957 17
Hose	I.D. 16 (0.63 in.), both ends M26 x 1.5 mm conical seal 24°, length 2.0 m (79 in.)	2	3362 2351 59
Hose	I.D. 16 (0.63 in.), both ends M26 x 1.5 mm conical seal 24°, length 2.4 m (94 in.)	2	3363 0833 13
Additional fitting kit	Needed to fit two hoses to the hydraulic breaker	1	3363 0980 19

Kits

Label kit

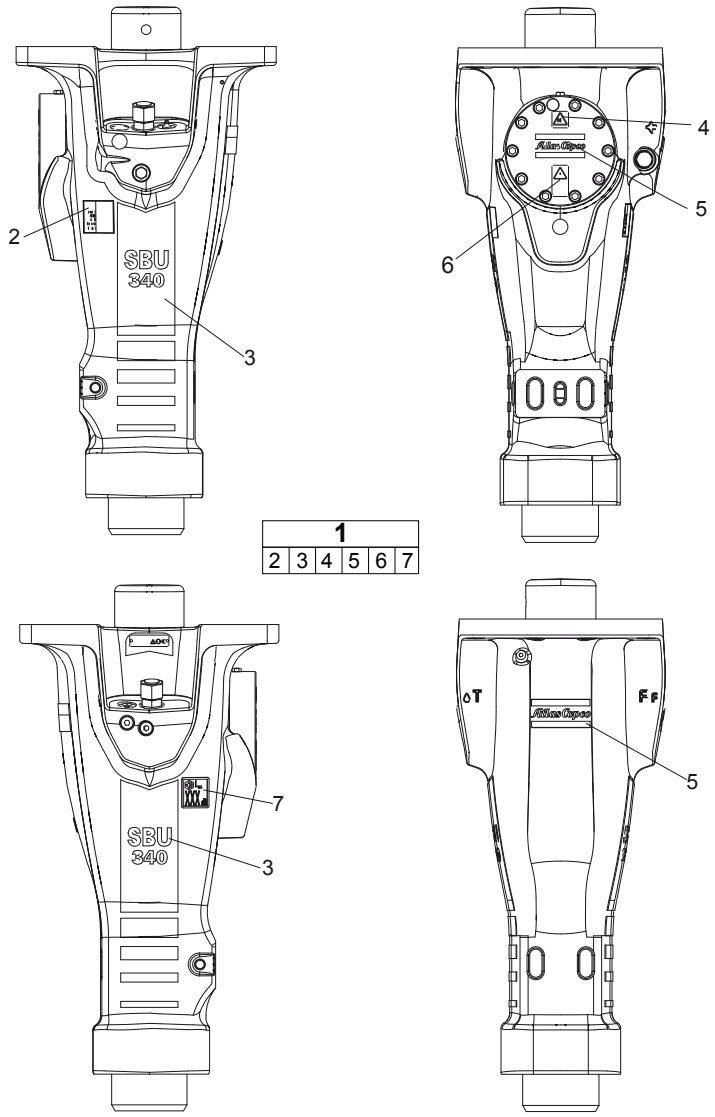

No.	Description	Remark	Quantity	Part number
1(2-7)	**Label kit**		1	3315 3698 90
2	AEM label		1	-
3	Product label	"SBU 340"	2	-
4	Safety label		1	-
5	Product label	"Atlas Copco"	2	-
6	Safety label		1	-
7	Noise level label		1	-

© 2012 Atlas Copco Construction Tools AB | No. 9800 0909 01d | 2012-12-05

Seal kit

Description	Remark	Quantity	Part number
Seal kit		1	3315 3506 90
Scraper ring		1	3315 3250 00
O-ring	13.3 x 2.4 mm 0.52 x 0.09 in. (70 shore)	1	0663 2120 00
Seal ring		1	3115 3290 02
O-ring	99.5 x 3 mm 3.9 x 0.4 in. (70 shore)	4	0663 2106 17
O-ring	7.3 x 2.4 mm 0.28 x 0.09 in. (90 shore)	1	0663 2114 00
Seal ring	142.2 x 137.2 x 3.7 mm 5.59 x 5.4 x 0.14 in.	9	0663 9900 31
Seal ring	45 x 53 x 3 mm 1.77 x 2.1 x 0.11 in.	1	0663 9900 33
O-ring	14 x 1.78 mm 0.55 x 0.07 in. (90 shore)	2	0663 2104 21
O-ring	20.35 x 1.78 mm 0.8 x 0.07 in. (90 shore)	1	9125 6211 00
Support ring		1	0661 2004 01
Seal ring		2	0665 0900 14
Plug		1	3315 3367 00
Wiper		1	0665 9099 57
Piston rod seal		1	0665 0701 37
Piston rod seal		1	0665 0701 46
Valve rubber		1	3315 2808 00
O-ring	133.07 x 1.78 mm 5.2 x 0.07 in. (70 shore)	1	0663 2106 69

Lower hammer part kit

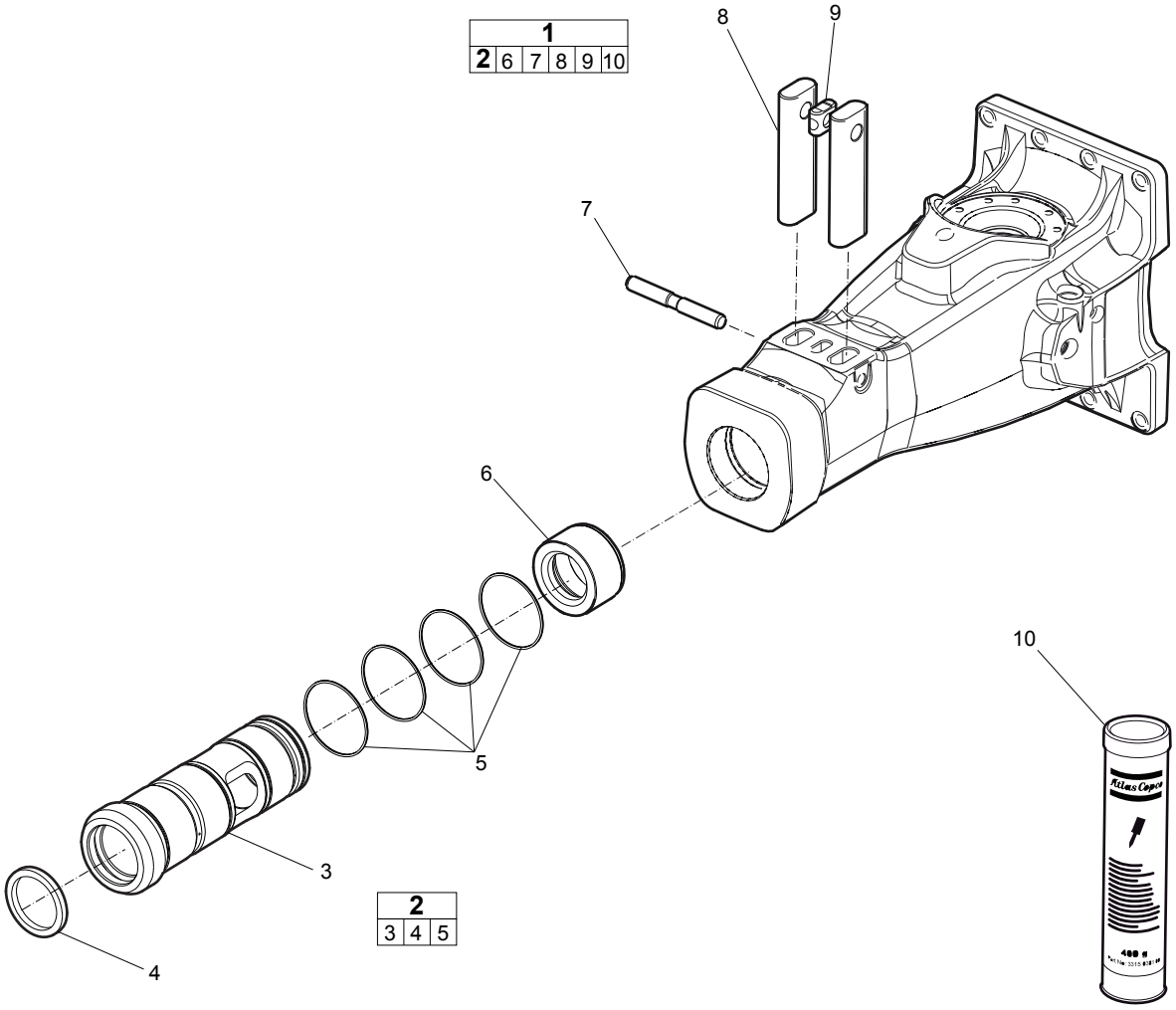

No.	Description	Remark	Quantity	Part number
1(2,6-10)	**Lower hammer part kit**		1	3315 3019 90
2(3-5)	**Bushing, complete**		1	3315 3019 80
3	Bushing		1	-
4	Scraper ring		1	3315 3250 00
5	O-ring		4	0663 2106 17
6	Stop ring		1	3315 3014 00
7	Lock pin		1	3315 2031 00
8	Tool retainer		2	3315 2030 00
9	Lock buffer		1	3315 1419 00
10	Chisel paste cartridge	400 g 0.88 lb	1	-

© 2012 Atlas Copco Construction Tools AB | No. 9800 0909 01d | 2012-12-05

Accumulator repair kit

Description	Remark	Quantity	Part number
Accumulator repair kit		1	3315 3554 90
Coil spring		1	3315 3035 00
Diaphragm support		1	3315 4007 00
Diaphragm		1	3315 2350 00
Seal ring		1	3115 3290 02
O-ring	13.3 x 2.4 mm (70 shore) 0.52 x 0.09 in.	1	0663 2120 00
Charge valve		1	3315 3660 00
O-ring	7.3 x 2.4 mm (90 shore) 0.28 x 0.09 in.	1	0663 2114 00
Parallel pin	D4 x 25 mm	1	0101 4140 00
Hexagon socket screw	Screw with extra high fatigue strength.	10	0211 1965 34

Dimensions

mm (inch)

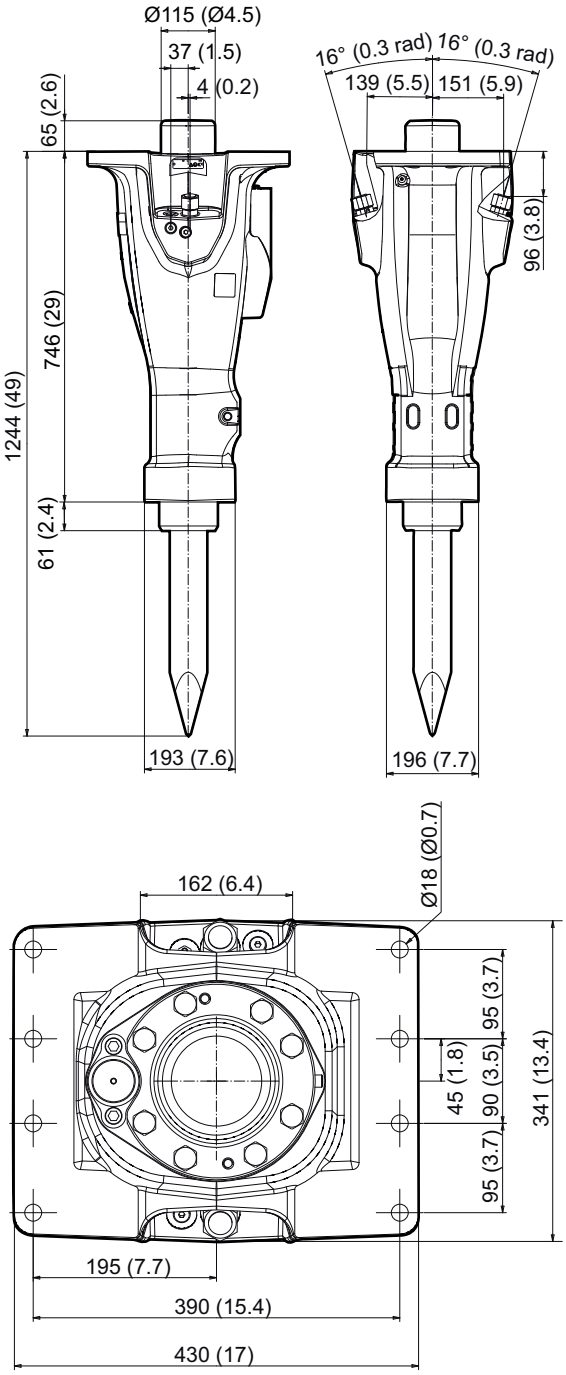

© 2012 Atlas Copco Construction Tools AB | No. 9800 0909 01d | 2012-12-05

Any unauthorized use or copying of the contents or any part thereof is prohibited. This applies in particular to trademarks, model denominations, part numbers, and drawings.

© 2012 Atlas Copco Construction Tools AB | No. 9800 0909 01d | 2012-12-05

Atlas Copco

www.atlascopco.com