SB

202

Spare parts list

Hydraulic breakers

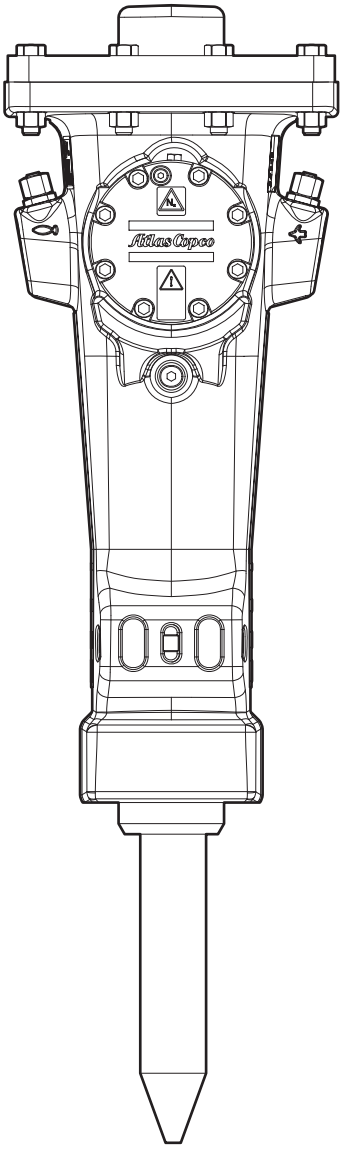

© 2012 Atlas Copco Construction Tools AB | No. 9800 0408 01h | 2012-08-20

Atlas Copco

Contents

General information 5

Spare parts list 6
Optional parts 10
Bushing oversize, complete 10
Restrictor, complete 12

Tightening torque 14

Working tools 15

Accessories 17
Optional equipment 17
Hydraulic hoses 17

Kits 18
Label kit 18
Seal kit 19
Lower hammer part kit 20
Accumulator repair kit 21

Dimensions 22

General information

This spare parts list applies to the following:

Part number	Description
8460 0300 50	Hydraulic breaker SB 202

Use only authorized parts. Any damage or malfunction caused by the use of unauthorized parts is not covered by Warranty or Product Liability.
Any unauthorized use or copying of the contents or any part thereof is prohibited. This applies in particular to trademarks, model denominations, part numbers, and drawings.

Instructions for use
This spare parts list contains no safety regulations and is merely intended to assist in the ordering of spare parts.
For information about operating, servicing, or repairing, the relevant Safety and operating instructions must be consulted at all costs.
Please observe the safety instructions listed in the relevant Safety and operating instructions!

Spare parts list

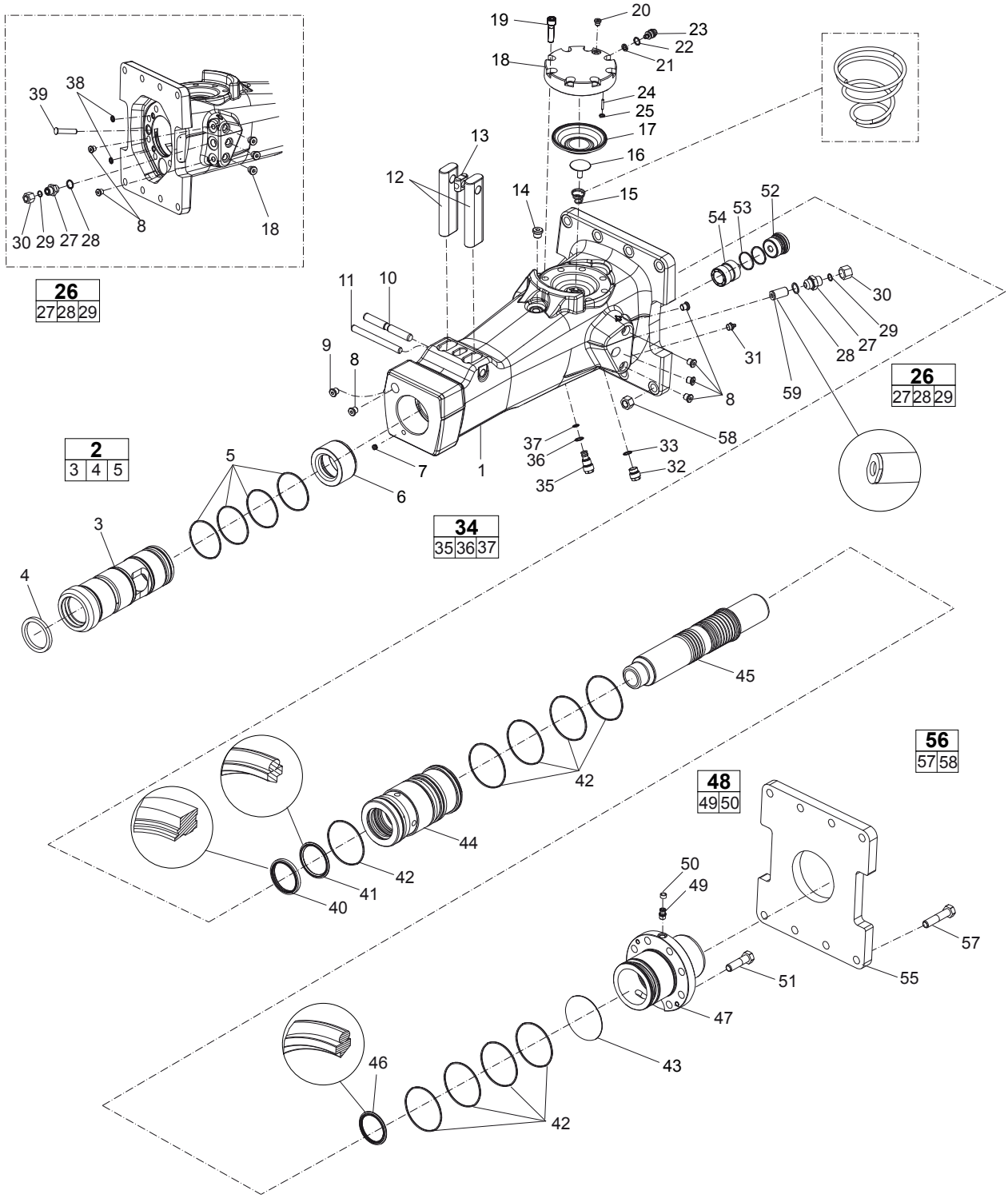

© 2012 Atlas Copco Construction Tools AB | No. 9800 0408 01h | 2012-08-20

No.	Description	Remark	Quantity	Part number
1	Breaker body		1	-
2(3-5)	**Bushing standard, complete**	For more bushings, see section "Bushing oversize, complete".	1	3315 3540 80
3	Bushing	Ø90 mm Ø3.54 in.	1	-
4	Scraper ring		1	3315 3562 00
5	O-ring	80 x 3 mm 3.15 x 0.12 in. (90 shore)	4	0663 2104 98
6	Stop ring		1	3315 2778 00
7	Plug		1	0686 1000 09
8	Plug	VSTI R ¼ - ED	7	0686 6442 07
9	Water nozzle, option		1	3315 3952 00
10	Lock pin		1	3315 1350 00
11	Spring pin, option		1	0108 1691 27
12	Tool retainer		2	3315 1349 00
13	Lock buffer		1	3315 1419 00
14	Hexagon socket plug	VSTI R ⅜ - ED	4	0686 3718 01
15	Coil spring		1	3315 2933 00
16	Diaphragm support		1	3315 2889 00
17	Diaphragm		1	3315 2890 00
18	Accumulator house		1	3315 2824 00
19	Hexagon socket screw	Screw with extra high fatigue strength.	8	0211 1965 34
20	Plug	VSTI R 1/8 - ED	1	0686 3718 05
21	Seal ring		1	3315 3290 02
22	O-ring	13.3 x 2.4 mm 0.52 x 0.09 in. (70 shore)	1	0663 2120 00
23	Charge valve		1	3315 3660 00
24	Parallel pin	D4 X 25 mm	1	0101 4140 00
25	O-ring	7.3 x 2.4 mm 0.29 x 0.09 in. (90 shore)	1	0663 2114 00
26(27-29)	**Nipple, complete**	There are two "Nipple, complete" on the machine.	1	0570 7000 03
27	Nipple		1	-
28	Seal ring		1	0664 0000 03
29	O-ring	12.42 x 1.78 mm 0.49 x 0.07 in. (90 shore)	1	0663 9055 01
30	Cap		2	0570 7000 19
31	Grease nipple	ISO 7-R ¼	1	0544 2153 00
32	Plug	Standard For restrictors instead of the plug, see section "Restrictor, complete".	1	3315 3052 00
33	O-ring	15.6 x 1.78 mm 0.61 x 0.07 in. (70 shore)	1	0663 9032 01
34(35-37)	**Pressure relief valve, complete**		1	3315 3349 00
35	Pressure relief valve		1	-
36	O-ring	15.6 x 1.78 mm 0.61 x 0.07 in. (70 shore)	1	0663 9032 01
37	O-ring	10.82 x 1.78 mm 0.43 x 0.07 in. (90 shore)	1	0663 9054 01
38	Seal	SCR 10 x 16 x 2.4 mm	2	0665 0900 14
39	Plug		1	3315 3011 00
40	Wiper		1	0665 9099 56
41	Piston rod seal		1	0665 0701 30
42	O-ring	99.5 x 3 mm 3.92 x 0.12 in. (90 shore)	9	0663 2104 94
43	O-ring	101.34 x 1.78 mm 3.99 x 0.07 in. (70 shore)	1	0663 2101 73

No.	Description	Remark	Quantity	Part number
44	Liner		1	3315 2774 00
45	Piston		1	3315 2773 00
46	Piston rod seal		1	0665 0701 29
47	Back head		1	3315 2931 00
48(49-50)	**Check valve, complete**		1	3315 2448 81
49	Check valve		1	-
50	Valve rubber		1	3315 2808 00
51	Hexagon head screw	M16 x 60 mm 8.8 fzb	8	0147 1481 03
52	Slide cover		1	3315 3598 00
53	O-ring	36.17 x 2.62 mm 1.42 x 0.10 in. (Polyuretan)	2	0663 2114 44
54	Control valve		1	3315 2776 00
55	Base plate, option		1	3315 2951 00
56(57-58)	**Set of eight screws, complete**		1	3315 2964 90
57	Screw		8	-
58	Nut	M16	8	-
59	Back pressure valve		1	3315 3040 80

© 2012 Atlas Copco Construction Tools AB | No. 9800 0408 01h | 2012-08-20

Optional parts

Bushing oversize, complete

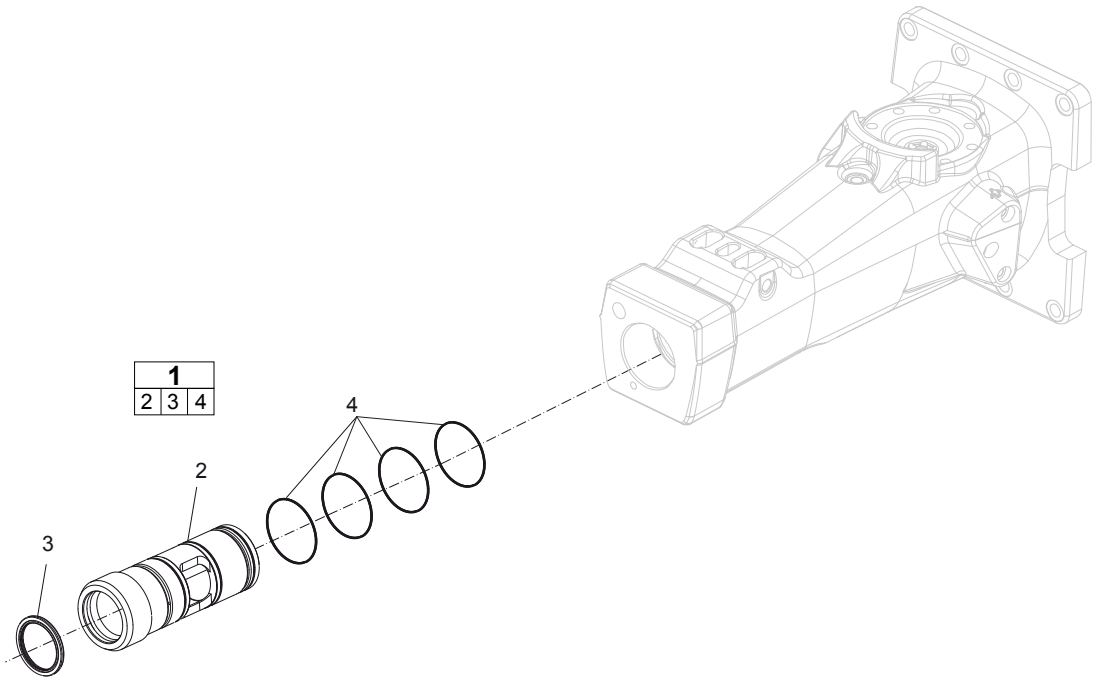

© 2012 Atlas Copco Construction Tools AB | No. 9800 0408 01h | 2012-08-20

No.	Description	Remark	Quantity	Part number
1(2-4)	**Bushing oversize, complete**		1	3315 2779 90
2	Bushing	Ø91.5 mm Ø3.6 in.	1	-
3	Scraper ring		1	3315 2825 00
4	O-ring	79.5 x 3 mm 3.13 x 0.12 in. (90 shore)	4	0663 6140 01

Restrictor, complete

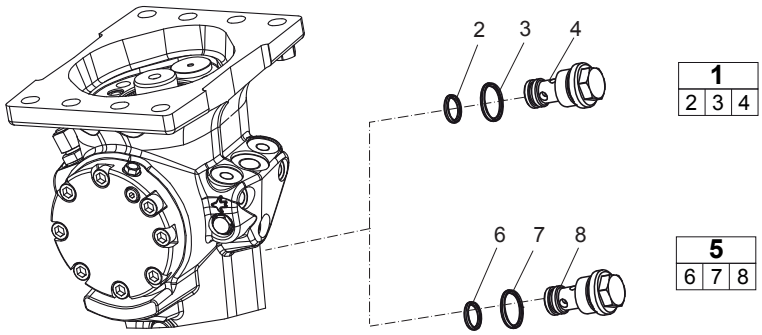

© 2012 Atlas Copco Construction Tools AB | No. 9800 0408 01h | 2012-08-20

No.	Description	Remark	Quantity	Part number
1(2-4)	**Restrictor, complete**		1	3315 3695 45
2	O-ring	10.82 x 1.78 mm 0.43 x 0.07 in.	1	0663 9054 01
3	O-ring	15.6 x 1.78 mm 0.61 x 0.07 in.	1	0663 9032 01
4	Restrictor	Ø 5.5 mm Ø0.22 in.	1	-
5(6-8)	**Restrictor, complete**		1	3315 3695 55
6	O-ring	10.82 x 1.78 mm 0.43 x 0.07 in.	1	0663 9054 01
7	O-ring	15.6 x 1.78 mm 0.61 x 0.07 in.	1	0663 9032 01
8	Restrictor	Ø 7 mm Ø0.28 in.	1	-

Tightening torque

No.	Description	Tightening torque	Remark
8	Plug	30 Nm	LOCTITE® 243™
14	Hexagon socket plug	80 Nm	LOCTITE® 243™
19	Hexagon socket screw	120 Nm	Molycote®
20	Plug	20 Nm	
23	Charge valve	20 Nm	
27	Nipple	210 Nm	
31	Grease nipple	30 Nm	
32	Plug or restrictor	80 Nm	
35	Pressure relief valve	80 Nm	
49	Check valve	30 Nm	LOCTITE® 243™
51	Hexagon head screw	180 Nm	Molycote®
58	Nut	200 Nm	Molycote®

LOCTITE is a regisrered trademark of Henkel Corporation. 243 is a trademark of Henkel Corporation. Molycote is a registrered trademark of Dow Corning Corporation.

© 2012 Atlas Copco Construction Tools AB | No. 9800 0408 01h | 2012-08-20

Working tools

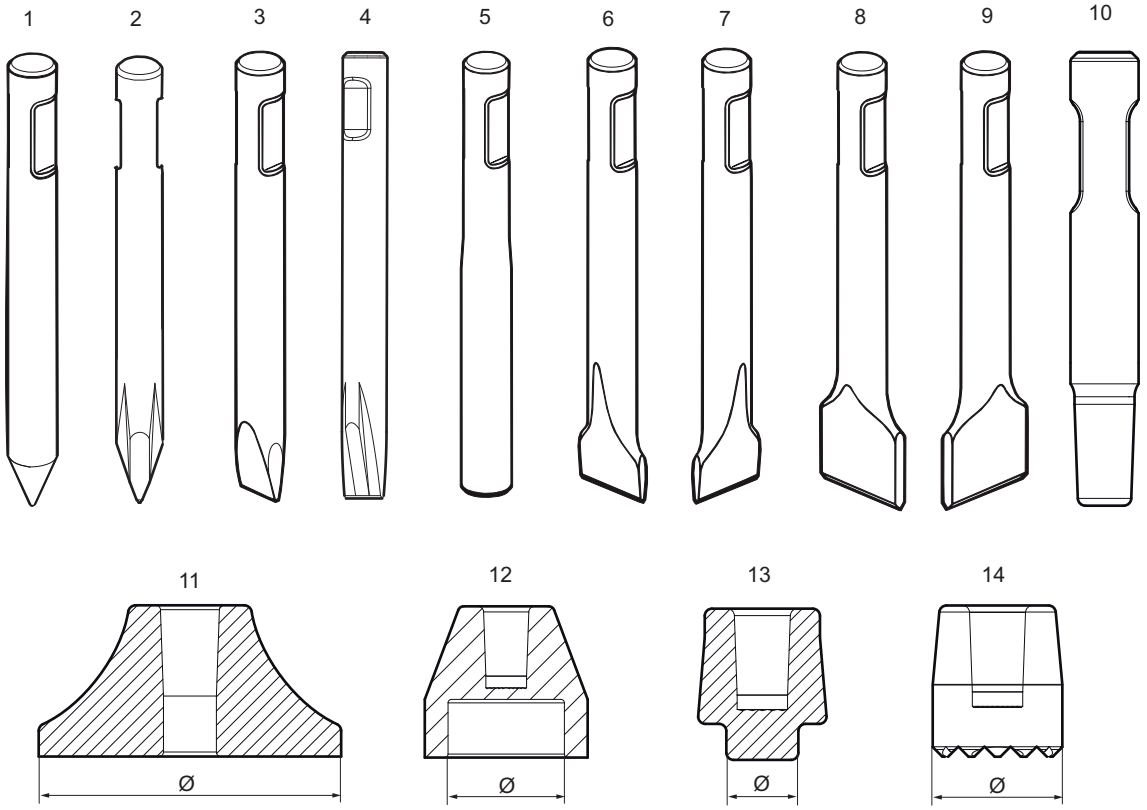

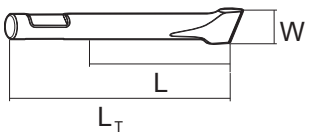

Metric

No.	Description	W (mm)	L (mm)	L_T (mm)	Wt (kg)	Part number
1	Moil point	- -	300 600	600 900	13 21	3083 3162 00 3083 3162 01
2	Moil point (X-Profile)	-	300	600	13	3363 0982 52
3	Chisel (cross)	65 65	300 600	600 900	14 22	3083 3161 00 3363 0983 75
4	Chisel (X-profile)	65	300	600	13	3363 0982 53
5	Blunt tool	-	300	600	15	3083 3411 00
6	Wide chisel (cross)	130	350	650	16	3083 3163 00
7	Wide chisel (parallel)	130	350	650	16	3083 3167 00
8	Asphalt cutter (cross)	140	350	650	16	3083 3409 46
9	Asphalt cutter (parallel)	140	350	650	16	3083 3409 47
10	Shaft	-	-	600	21	3315 3702 00
11	Tamping pad (square)	Ø300	-	-	33	3315 3709 00
12	Post driver pad (round)	Ø150	-	-	21	3315 3717 00
13	Pile driver pad (round)	Ø100	-	-	9	3315 3723 00
14	Bushing pad (round)	Ø130	-	-	9.8	3315 3730 00

Imperial

No.	Description	W (in.)	L (in.)	L_T (in.)	Wt (lb)	Part number
1	Moil point	- -	11.81 23.62	23.62 35.43	28.66 46.30	3083 3162 00 3083 3162 01
2	Moil point (X-Profile)	-	11.81	23.62	28.66	3363 0982 52
3	Chisel (cross)	2.56 2.56	11.81 23.62	23.62 35.43	30.86 48.50	3083 3161 00 3363 0983 75
4	Chisel (X-profile)	2.56	11.81	23.62	28.66	3363 0982 53
5	Blunt tool	-	11.81	23.62	33.07	3083 3411 00
6	Wide chisel (cross)	5.12	13.78	25.60	35.27	3083 3163 00
7	Wide chisel (parallel)	5.12	13.78	25.60	35.27	3083 3167 00
8	Asphalt cutter (cross)	5.51	13.78	25.60	33.07	3083 3409 46
9	Asphalt cutter (parallel)	5.51	13.78	25.60	33.07	3083 3409 47
10	Shaft	-	-	23.62	0.83	3315 3702 00
11	Tamping pad (square)	Ø11.81	-	-	1.30	3315 3709 00
12	Post driver pad (round)	Ø5.9	-	-	0.83	3315 3717 00
13	Pile driver pad (round)	Ø3.9	-	-	0.35	3315 3723 00
14	Bushing pad (round)	Ø5.1	-	-	0.38	3315 3730 00

© 2012 Atlas Copco Construction Tools AB | No. 9800 0408 01h | 2012-08-20

Accessories

Optional equipment

Description	Remark	Quantity	Part number
Grease gun	For manual greasing with cartridge, 400 g (0.88 lb)	1	0909 1071 00
Chisel paste cartridge	400 g x 12 0.88 lb x 12	1	3363 0949 13
ContiLube™ II micro		1	3315 3831 90
Welding kit, universal	For ContiLube™ II micro	1	3315 3867 80
Hose kit, universal	For ContiLube™ II micro	1	3315 3862 80
Chisel paste cartridge	150 g x 12 0.33 lb x 12	1	3363 1064 47
Filling device	For the 150 g (0.33 lb) Chisel paste cartridges, to use in combination with Chisel paste container 15 kg (33 lb)	1	3363 0946 69
Filling adapter	For the 150 g (0.33 lb) Chisel paste cartridges, suitable with the filling device for 15 kg (33 lb) and 45 kg (99 lb)	1	3315 3839 80
Filling device	For the 150 g (0.33 lb) Chisel paste cartridges, to use in combination with Chisel paste container 45 kg (99 lb)	1	3363 0664 11
Chisel paste container	15 kg 33 lb	1	3362 2639 00
Chisel paste container	45 kg 99 lb	1	3362 2632 75
Filling device for accumulator		1	3360 9204 15
Nipple, for charging the accumulator		1	3363 0944 59
Filling hose, for charging the accumulator		1	3361 3298 03
Bushing wear controller		1	3315 3531 00

Hydraulic hoses

Description	Remark	Quantity	Part number
Hose	I.D. 16 (0.63 in.), both ends M26 x 1.5 mm conical seal 24°, length 1,500 mm (59 in.)	2	3360 9957 17
Hose	I.D. 16 (0.63 in.), both ends M26 x 1.5 mm conical seal 24°, length 2,000 mm (79 in.)	2	3362 2351 59
Hose	I.D. 16 (0.63 in.), both ends M26 x 1.5 mm conical seal 24°, length 2,400 mm (94 in.)	2	3363 0833 13
Additional fitting kit	Needed to fit two hoses to the hydraulic breaker	1	3363 0980 18

Kits

Label kit

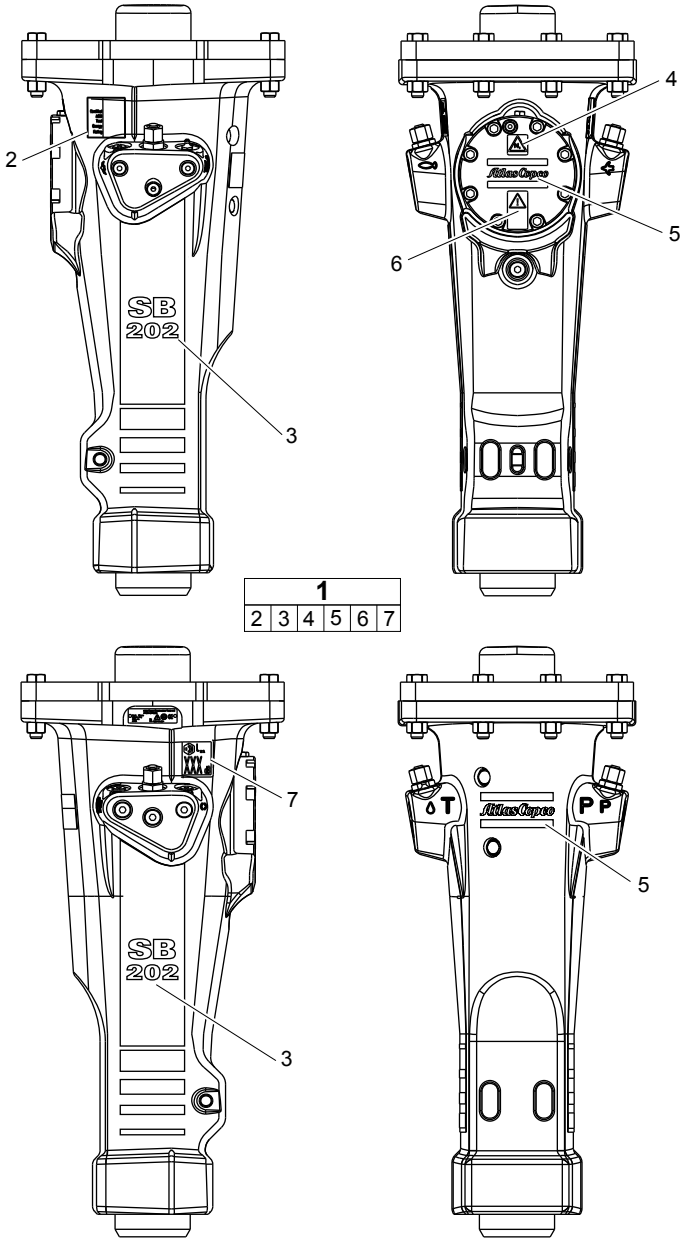

No.	Description	Remark	Quantity	Part number
1(2-7)	**Label kit**		1	3315 2943 90
2	AEM sign		1	-
3	Product label	"SB 202"	2	-
4	Safety label		1	-
5	Product label	"Atlas Copco"	2	-
6	Safety label		1	-
7	Sound power label		1	-

© 2012 Atlas Copco Construction Tools AB | No. 9800 0408 01h | 2012-08-20

Seal kit

Description	Remark	Quantity	Part number
Seal kit		1	3315 2870 90
Scraper ring		1	3315 3562 00
O-ring	79.5 x 3 mm 3.13 x 0.12 in. (90 shore)	4	0663 6140 01
Seal washer		1	0661 1000 24
O-ring	13.3 x 2.4 mm 0.52 x 0.09 in. (70 shore)	1	0663 2120 00
O-ring	7.3 x 2.4 mm 0.29 x 0.09 in. (90 shore)	1	0663 2114 00
Seal ring		2	0664 0000 03
Seal ring		1	3115 3290 02
O-ring	12.42 x 1.78 mm 0.49 x 0.07 in. (90 shore)	2	0663 9055 01
O-ring	15.6 x 1.78 mm 0.61 x 0.07 in. (70 shore)	2	0663 9032 01
O-ring	10.82 x 1.78 mm 0.43 x 0.07 in. (90 shore)	2	0663 9054 01
Seal	SCR 10 x 16 x 2.4 mm	2	0665 0900 14
Plug		1	3315 3011 00
Wiper		1	0665 9099 56
Piston rod seal		1	0665 0701 30
O-ring	99.5 x 3 mm 3.9 x 0.12 in. (90 shore)	9	0663 2104 94
Piston rod seal		1	0665 0701 29
Valve rubber		1	3315 2808 00
O-ring	36.17 x 2.62 mm (Polyuretan) 1.42 x 0.10 in.	2	0663 2114 44
O-ring	101.34 x 1.78 mm 3.99 x 0.07 in. (70 shore)	1	0663 2101 73

Lower hammer part kit

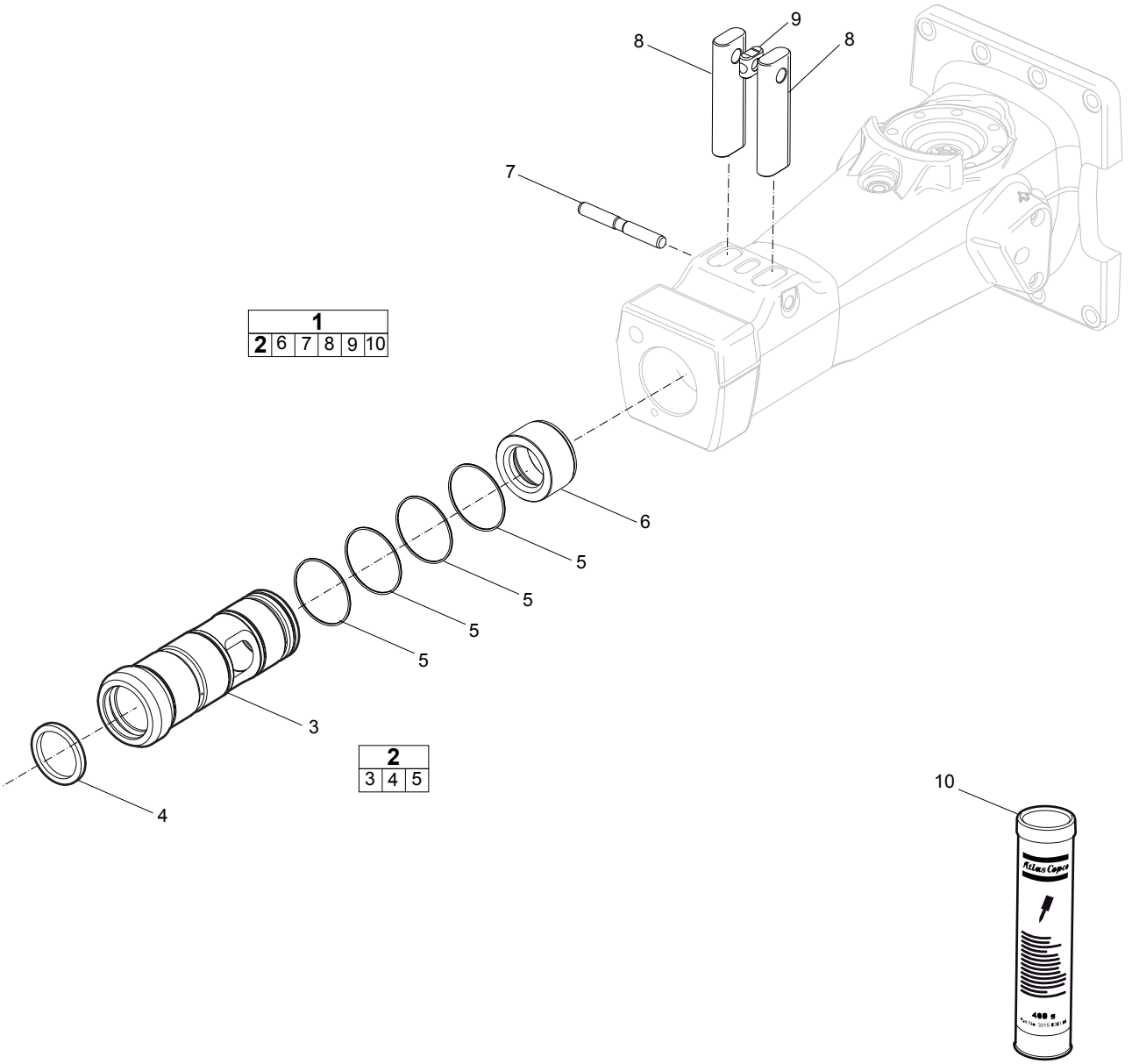

No.	Description	Remark	Quantity	Part number
1(2,6-10)	**Lower hammer part kit**		1	3315 3521 45
2(3-5)	**Bushing, complete**		1	3315 3540 80
3	Bushing		1	-
4	Scraper ring		1	3315 3562 00
5	O-ring		4	0663 2104 98
6	Stop ring		1	3315 2778 00
7	Lock pin		1	3315 1350 00
8	Tool retainer		2	3315 1349 00
9	Lock buffer		1	3315 1419 00
10	Chisel paste cartridge	400g	1	-

© 2012 Atlas Copco Construction Tools AB | No. 9800 0408 01h | 2012-08-20

Accumulator repair kit

Description	Remark	Quantity	Part number
Accumulator repair kit		1	3315 2824 90
Coil spring		1	3315 2933 00
Diaphragm support		1	3315 2889 00
Diaphragm		1	3315 2890 00
Hexagon socket screw	Screw with extra high fatigue strength.	8	0211 1965 34
Plug	VSTI R ⅛-ED	1	0686 3718 05
Seal washer		1	3315 3290 02
O-ring	13.3 x 2.4 mm 0.52 x 0.09 in. (70 shore)	1	0663 2120 00
Charge valve		1	3315 3660 00
O-ring	7.3 x 2.4 mm 0.29 x 0.09 in. (90 shore)	1	0663 2114 00
Parallel pin	D4 x 25 mm	1	0101 4140 00

Dimensions

mm (inch)

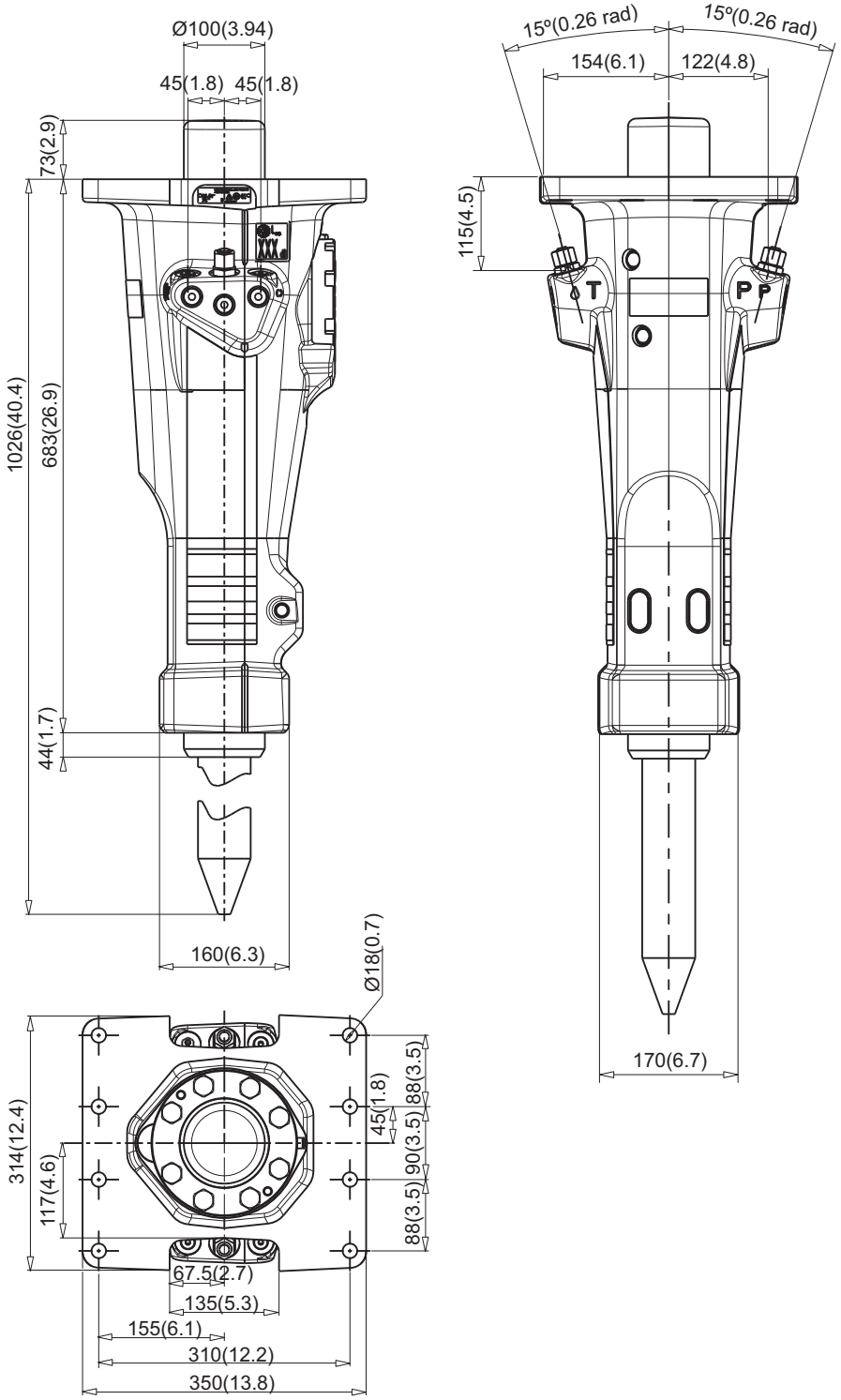

© 2012 Atlas Copco Construction Tools AB | No. 9800 0408 01h | 2012-08-20

Any unauthorized use or copying of the contents or any part thereof is prohibited. This applies in particular to trademarks, model denominations, part numbers, and drawings.

© 2012 Atlas Copco Construction Tools AB | No. 9800 0408 01h | 2012-08-20

Atlas Copco

www.atlascopco.com